AKBU2 GNSS Board

Data Sheet(v1.2)

AscenKorea

Table of Contents

1. Functional Description

1.1 Overview

The Ascenkorea AKU2 module utilizes the MediaTek new generation GPS Chipset MT3339, MT3333 that achieves the industry's highest level of sensitivity (-165dBm) and instant Time-to-First Fix(TTFF) with lowest power consumption for precise GPS signal processing to give the ultra-precise positioning under low receptive, high velocity conditions.

With built-in LNA to reach total NF to 0.7dB customers can relax antenna requirement and don't need for external LNA. Power management design makes AKU2 easily integrated into your system without extra voltage regulator. AKU2 allows direct battery connection, no need any external LDO and gives customers plenty of choices for their application circuit.

Up to 12 multi-tone active interference canceller (ISSCC2011 award), customer can have More flexibility in system design. Supports up to 210 PRN channels with 66 search channels and 22 simultaneous tracking channels, AKU2 supports various location and navigation applications, including autonomous GPS, SBAS ranging (WAAS, EGNO, GAGAN, and MSAS), DGPS (RTCM), and AGPS.

AKU2 is excellent low power consumption characteristic (acquisition 63mW, tracking 49mW), power sensitive devices, especially portable applications, need not worry about operating time anymore and user can get more fun. Combined with many advanced features including AlwaysLocate™, EASY™, EPO™, and logger function.

Application

- Handheld Device
- Tablet PC/PLB/MID
- M2M application
- Asset management
- Surveillance

1.2 Highlights and Features

- Ultra-high sensitivity, -165dBm
- 33 tracking/ 66 acquisition-channel GPS receiver(GPSONLY)
- 33 tracking/ 99 acquisition-channel GPS/GLONASS/GALILEO receiver(GNSS)
- DGPS(WAAS/EGNOS/MSAS/GAGAN) support
- Multi-path detection and compensation
- UART TTL Interface support
- High update rate, up to 10Hz (configurable by firmware)
- Magnetic Variation function support (configurable by AscenKorea customized firmware)
- Low power consumption, 48mA acquisition, 37mA tracking
- Low shut-down current consumption, 20uA typical

Note 1: SBAS can only be enabled when update rate is less than or equal to 5Hz.
Note2: Some features need special firmware or command programmed by customer.

1.3 System Block Diagram

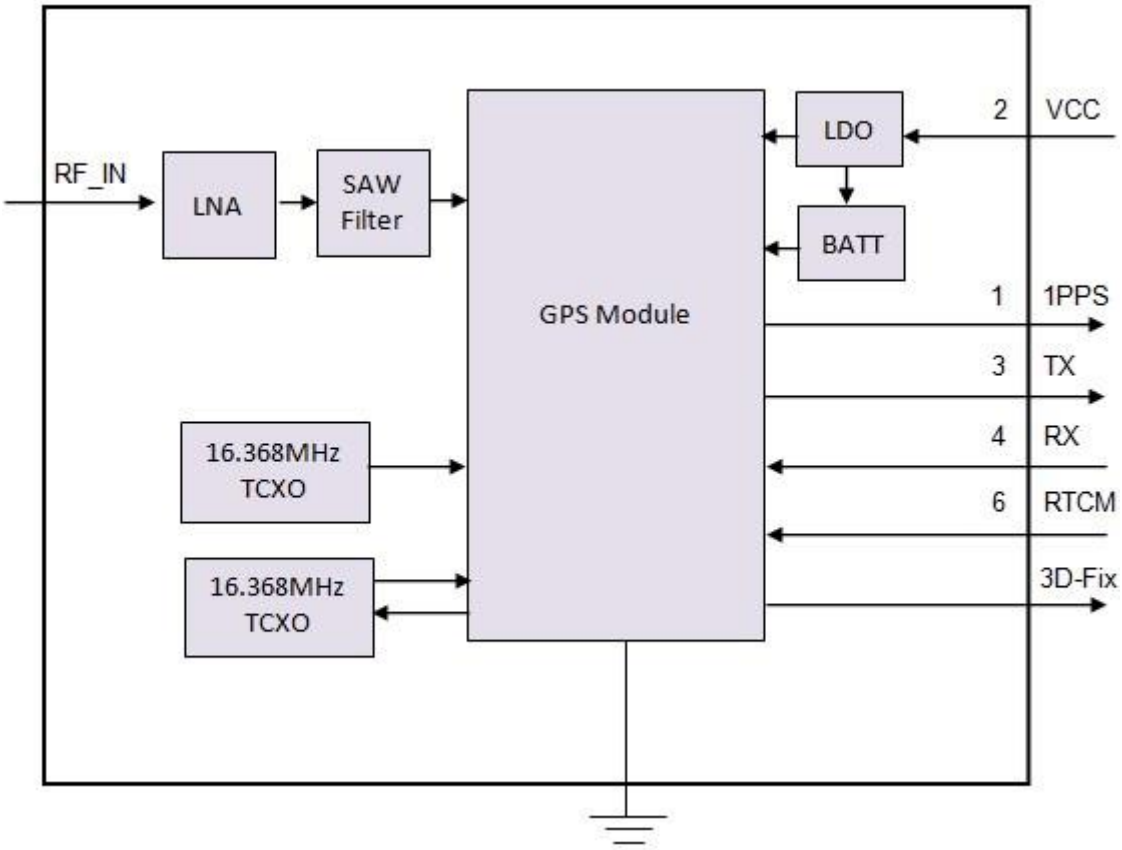

1.4 Multi-tone active interference canceller

Because different application (Wi-Fi , GSM/GPRS,3G/4G,Bluetooth)are integrated into navigation system , the harmonic of RF signal will influence the GPS reception , The multi-tone active-interference canceller (abbr: MTAIC) can reject external RF interference which come from other active components on the main board , to improve the capacity of GPS reception without any needed HW change in the design .AKU2 can cancel up to 12 independent channel interference continuous wave (CW)

1.5 1PPS

A pulse per second (1 PPS) is an electrical signal that very precisely indicates the start of a second. Depending on the source, properly operating PPS signals have an accuracy ranging 10ns.

1 PPS signals are used for precise timekeeping and time measurement. One increasingly Common use is in computer timekeeping, including the NTP protocol. A common use for the PPS signal is to connect it to a PC using a low-latency, low-jitter wire connection and allow a program to synchronize to it:

PA6C supply the high accurate 1PPS timing to synchronize to GPS time after 3D-Fix.
A power-on output 1pps is also available for customization firmware settings.

1.6 Timer Function for device on/off control(Option)

The timer function support a time tick generation of 31.25ms resolution, the period of timer can be from 31.25ms to 524287s, the pin outputs signal during the timer period and becomes a input pin after time out, the system can use the pin to connect an external LDO controller and pull high circuit to enable other device for specified operation (ex: wake up GSM/GPRS processor to transmit location data of asset during one period, then enter power saving mode after finish its job)

1.7 32KHz clock output(Option)

The 32K Out can output 32.768KHz clock which can be used to support some peripherals that need an real time clock source, don’t need an external crystal and cost saving. The pin
also could be programmed to be input pin which can receive the signal from an external accelerator sensor or vibration sensor to be the wake -up signal of AKU2 when the module is in low power mode.

1.8 SYNC(Option)

Sync is a time stamp signal input pin for introducing an external timing to the GPS receiver And obtaining the relationship between the external timing and the receiver local timing .Which the precise external timing input and the established relationship , the GPS time of week (TOW) can be correctly estimated in the GPS receiver . This technology is beneficial for time to first fix (TTFF), especially in weak signal environment s , in hot start case , with priori information about GPS receiver's location and satellite ephemeris data, the GPS receiver uses the correct GPS TOW to accuracy predict the signal code chip/phase .Therefore , the code search range can be narrowed down accordingly. Hence fast TTFF is achieved by the SYNC technology.

1.9 EASY™

The EASY™ is embedded assist system for quick positioning, the GPS engine will calculate and predict automatically the single emperies (Max. up to 3 days)when power on ,and save the predict information into the memory , GPS engine will use these information for positioning if no enough information from satellites , so the function will be helpful for positioning and TTFF improvement under indoor or urban condition ,the Backup power (VBACKUP) is necessary .

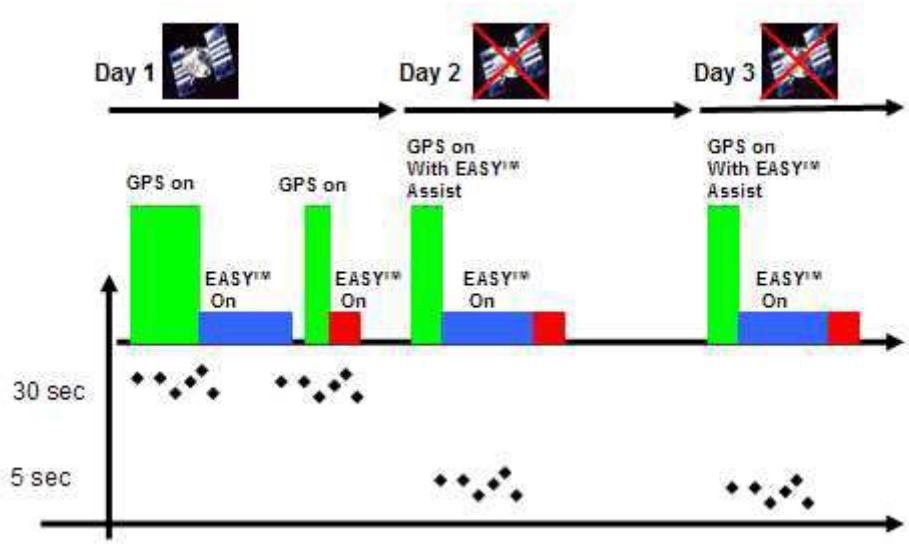

Figure 1.12-1 EASY System operation

Please refer to the Fig 1.12-1, When GPS device great the satellite information from GPS satellites, the GPS engine automatically pre-calculate the predict orbit information for 3 days

The GPS device still can quickly do the positioning with EASY™ function under weak GPS signal.

1.10 AlwaysLocate™(Advance Power Periodic Mode)

Embedded need to be executed full y all the time , the algorithm can be set by different necessary to decide the operation level of GPS function , reduce power consumption , it will suffer positing accuracy to get the target of power saving and extend the usage time of product . (The positioning accuracy of reporting location < 50m (CEP)

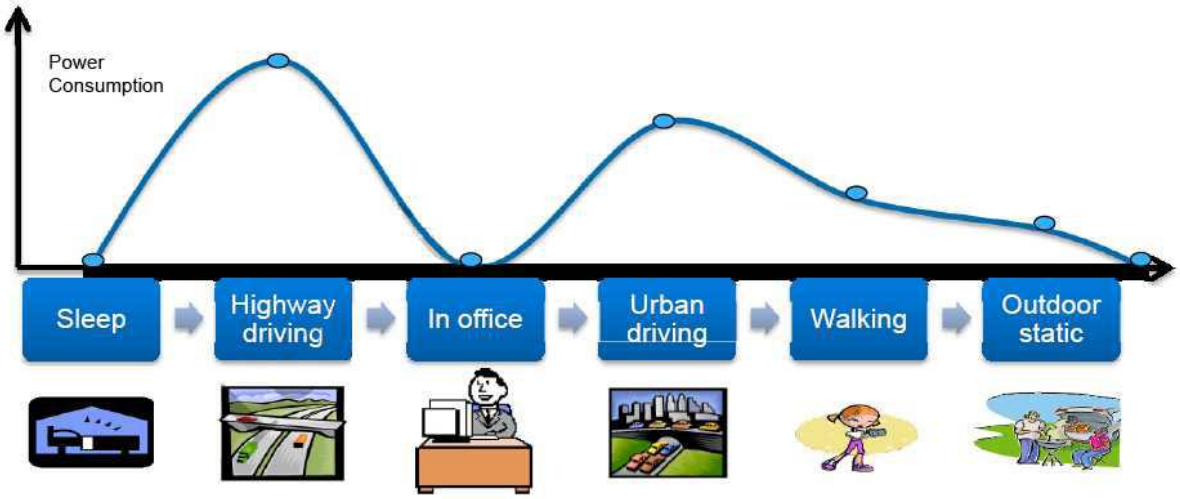

1.11 Embedded Logger function

The Embedded Logger function don't need host CPU (MCU) and external flash to handle the operation , GPS Engine will use internal flash (embedded in GPS chipset) to log the GPS data (Data format : UTC, Latitude , longitude, Valid ,Checksum), the max log days can up to 2 days under AlwaysLocate™ condition .Note

Note: Data size per log was shrunk from 24 bytes to 15 bytes.

2. Specifications

Unit: mm

Mechanical (Dimension)

Board Ass'y

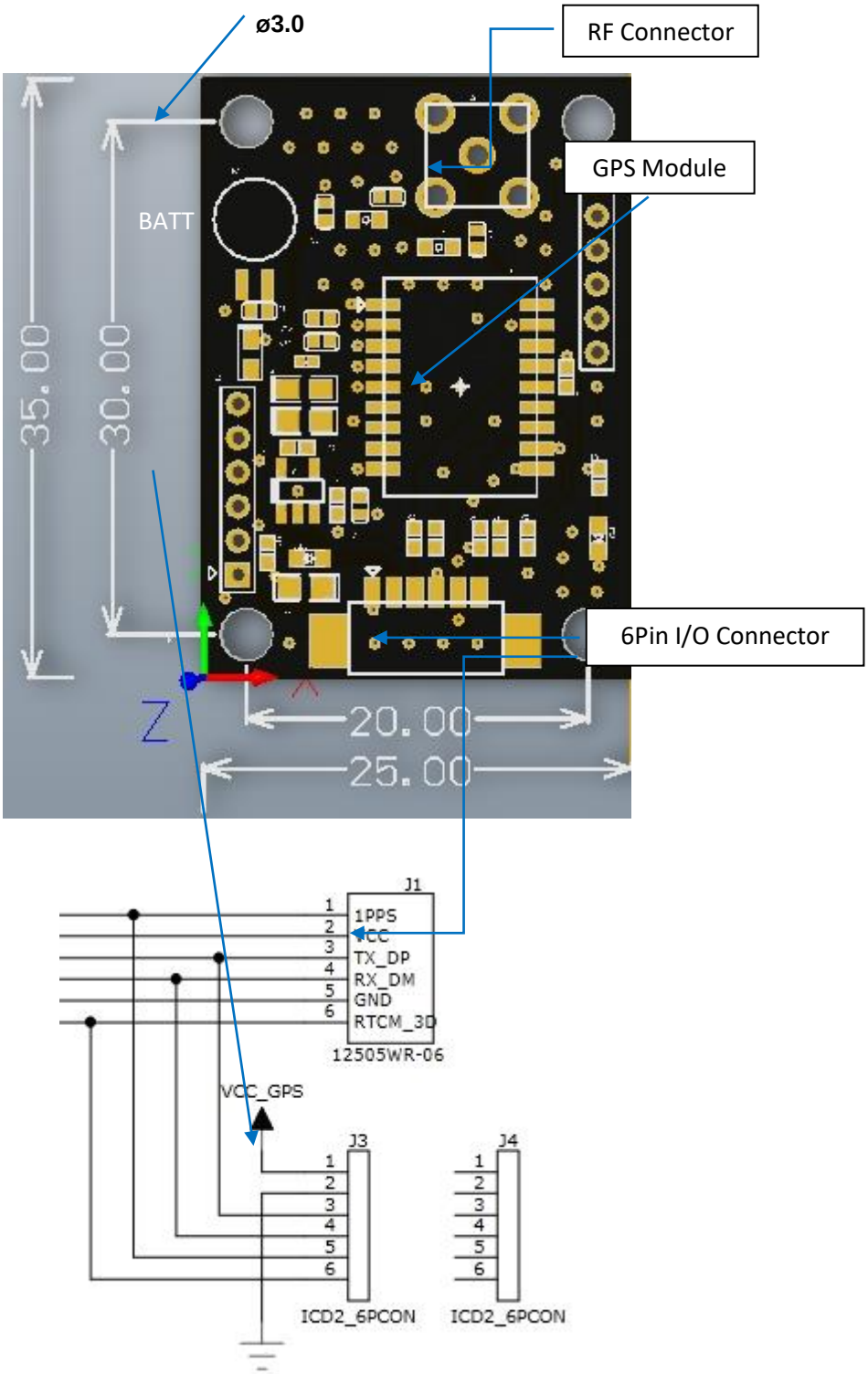

TOP VIEW

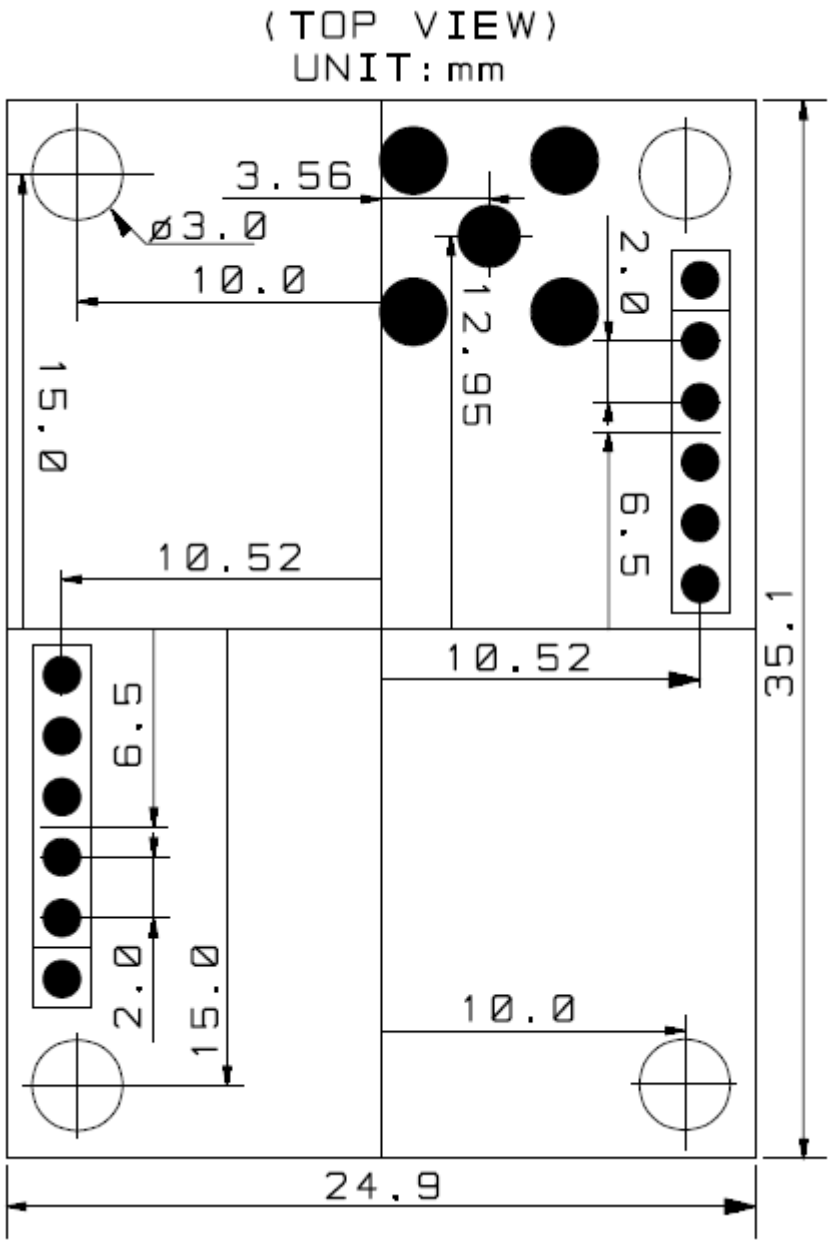
(TOP VIEW)
UNIT: mm
3.56
ø3.0
10.0
12.95
2.0
15.0
9.5
10.52
10.52
35.1
6.5
2.0
15.0
10.0
24.9

Item	Model Name	Description
1	AKU2-SM	6 Pin I/O Connector, SMA Type Connector
2	AKU2-MC	6 Pin I/O Connector, MCX Type Connector

RF Connector (SMA / MCX)

Unit: mm

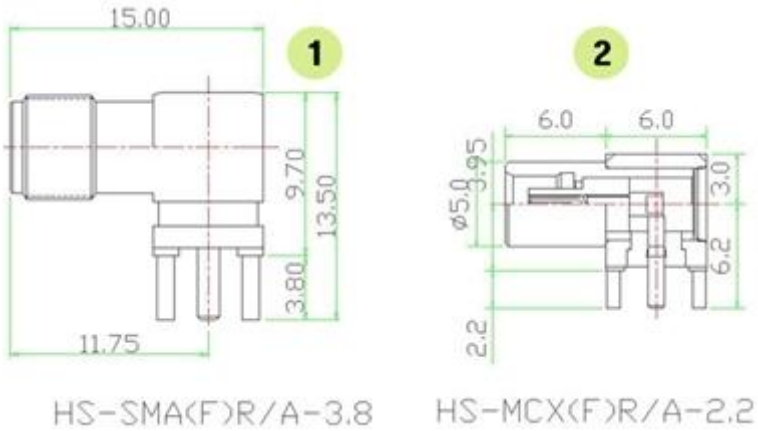

6 Pin connector

Wire to Board Wafer: http://yeonho.com/pdf/12505WR.pdf 12505WR-06A00

Wire to Board Housing: http://yeonho.com/pdf/12505HS.pdf 12505HS-06000

1.25mm (0.049") PITCH CONNECTOR

Wire-to-Board Housing

12505HS Series

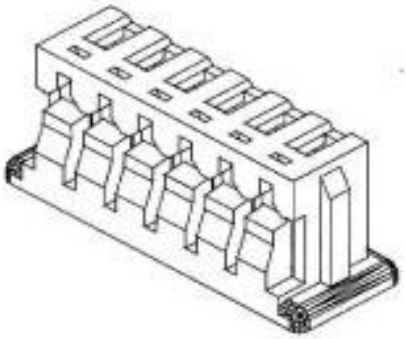

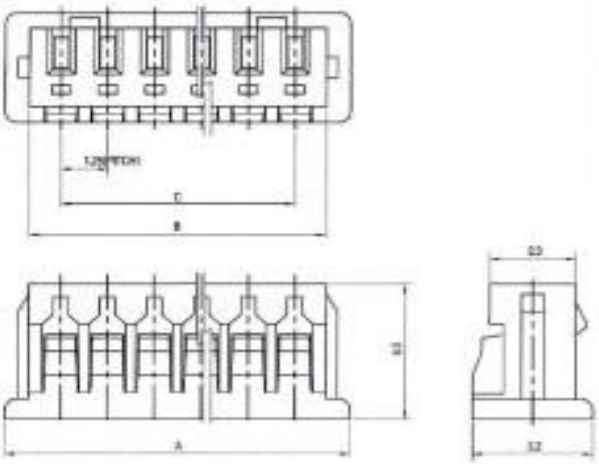

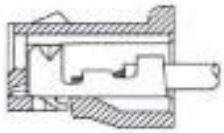

TERMINAL ASSEMBLY DRAWING

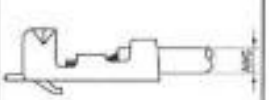

AWG : #28 ~ #32

Material

NO	DESCRIPTION	TITLE	MATERIAL
1	HOUSING	12505HS	PA66, UL 94V Grade

Available Pin

PARTS NO.	A	B	C
12505HS-02000	4.25	2.95	1.25
12505HS-03000	5.50	4.20	2.50
12505HS-04000	6.75	5.45	3.75
12505HS-05000	8.00	6.70	5.00
12505HS-06000	9.25	7.95	6.25
12505HS-07000	10.50	9.20	7.50
12505HS-08000	11.75	10.45	8.75
12505HS-09000	13.00	11.70	10.00
12505HS-10000	14.25	12.95	11.25
12505HS-11000	15.50	14.20	12.50
12505HS-12000	16.75	15.45	13.75
12505HS-13000	18.00	16.70	15.00
12505HS-14000	19.25	17.95	16.25
12505HS-15000	20.50	19.20	17.50

Specification

ITEM	SPEC
Voltage Rating	AC/DC 125V
Current Rating	AC/DC 1A
Operating Temperature	-25℃~+85℃
Contact Resistance	35mΩ MAX
Withstanding Voltage	AC250V/1min
Insulation Resistance	100MΩ MIN
Applicable Wire	AWG #28~#32
Applicable P.C.B	-
Applicable FPC/FFC	-
Solder Height	-
Crimp Tensile Strength	-
UL FILE NO	E108708

Application Terminal : 12505TS (22 Page)

AscenKorea

2.1 Pin Assignment (6 Pin connector)

Pin	Name	I/O	Description & Note
1	1PPS	O	1PPS Time Mark Output 2.8V CMOS Level (Default)
2	VCC	PI	Main DC power input (Default)
3	TXDA	O	Serial Data Output for NMEA output (Default)
4	RXDA	I	Serial Data Input for Firmware update (Default)
5	GND	P	Ground (Default)
6	RTCM	I	Serial Data Input for DGPS RTCM data streaming (Optional)
	3D_FIX	O	3D-fix indicator (Optional)

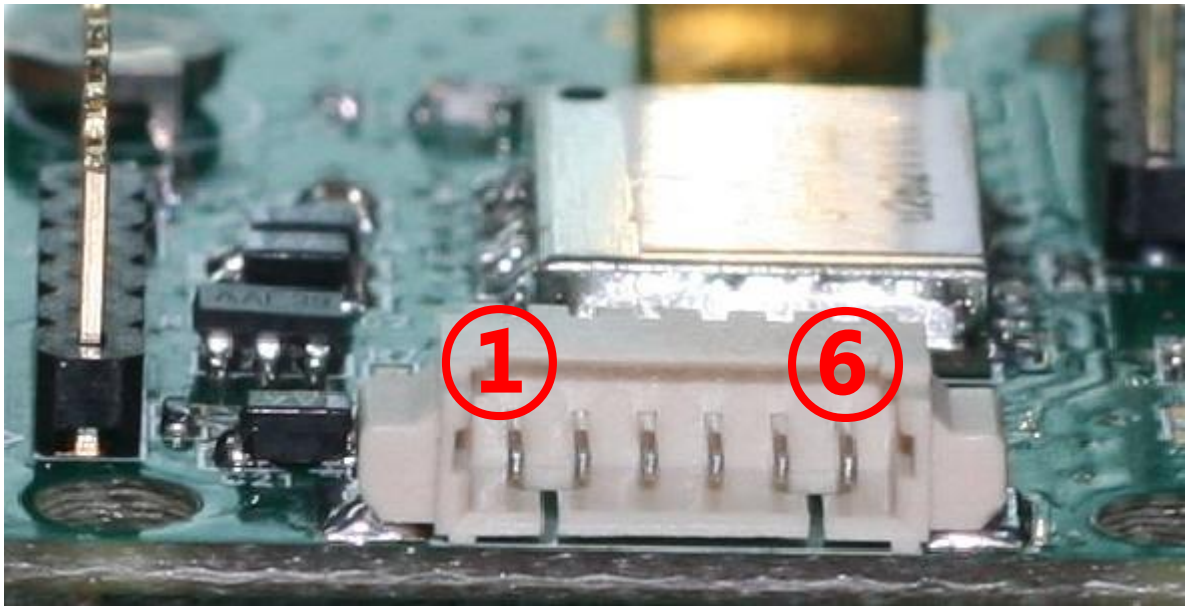

2.2 Description of I/O Pin

1PPS, Pin1

This pin provides one pulse-per-second output from the module, which is synchronized to GPS time. Keep floating if not used.

VCC, Pin2

The main DC power supply for the module. The voltage should be kept between 5.0V.

The ripple must be controlled under 50mV$_{pp}$

TXDA, Pin3 (Default)

This is the UART transmitter of the module. It outputs the GPS information for application

RXDA, Pin4 (Default)

This is the UART receiver of the module. It is used to receive commands from system

GND, Pin5

Ground

RTCM, Pin6 (Optional)

This pin receive DGPS data of RTCM protocol (TTL level) ,if not used keep floating

3D-FIX, Pin6 (Optional)

The 3D-FIX was assigned as fix flag output. If not used, keep floating

- Before 2D Fix
  The pin should continuously output one-second high-level with one-second low-level signal

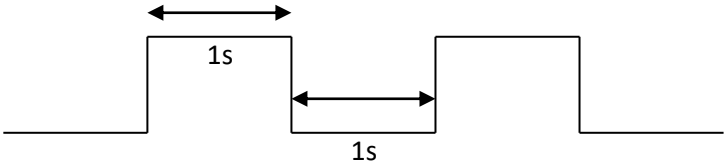

- After 2D or 3D Fix
  The pin should continuously output low-level signal

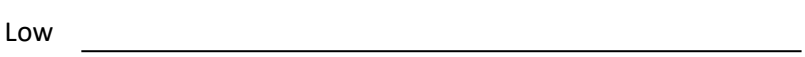

2.3 Specification List

Parameter	Description
GPS Solution	MT3339(GPS) / MT3333(GNSS OPTION)
Frequency	GPSL1, 1575.42MHz, GLONASS L1,1598.0625~1605.375MHz
Sensitivity[1]	Acquisition -148dBm, cold start Reacquisition -163dBm Tracking -165dBm
Channel	66 channels(GPS) 99 channels(GNSS)
TTFF[1]	Hot start: 1 second typical Warm start: 33 seconds typical Cold start: 35 seconds typical (No. of SVs>4, C/N>40dB, PDop<1.5)
Position Accuracy	Without aid:3.0m (50% CEP) DGPS(SBAS(WAAS,EGNOS,MSAS)):2.5m (50% CEP)
Velocity Accuracy	Without aid : 0.1m/s DGPS(RTM,SBAS(WAAS,EGNOS,MSAS)):0.05m/s Without aid:0.1 m/s^2
Acceleration Accuracy	Without aid:0.1 m/s^2 DGPS(RTM,SBAS(WAAS,EGNOS,MSAS)):0.05m/s^2
Timing Accuracy (1PPS output)	10 ns RMS
Altitude	Maximum 18,000m (60,000 feet)
Velocity	Maximum 515m/s (1000 knots)
Acceleration	Maximum 4G
Update Rate	1Hz (default), maximum 10Hz
Baud Rate	9600 bps (default)
DGPS	SBAS(defult) [QZSS,WAAS, EGNOS, MSAS,GAGAN]
AGPS	Support
Power Supply	VCC：5V
Current Consumption	19mA acquisition, 15mA tracking
Working Temperature	-40 °C to +85 °C(without Battery) -20 °C to +60 °C(with Battery)
Dimension	25 X 35 X 9.7(SMA) [mm]
Weight	7 g

[1] Reference to GPS chipset specification

2.4 Absolute Maximum Ratings

The voltage applied for VCC should not exceed 6VDC;

Parameter	Symbol	Min.	Typ.	Max.	Unit
Power Supply Voltage	VCC		5.0		**V**
Backup battery Voltage	VBACKUP	2.0	3.0	4.3	**V**

2.5 Operating Conditions

Parameter	Condition	Min.	Typ.	Max.	Unit
Operation supply Ripple Voltage	_	_	_	50	**mVpp**
RX0 TTL H Level	VCC=3.3V	2.0	_	VCC	**V**
RX0 TTL L Level	VCC=3.3V	0	_	0.8	**V**
TX0 TTL H Level	VCC=3.3V	2.4	_	2.8	**V**
TX0 TTL L Level	VCC=3.3V	0	_	0.4	**V**
RTCM TTL H Level	VCC=3.3V	2.0	_	VCC	**V**
USB D+	Standard	_	_	_	**V**
USB D-	Standard	_	_	_	**V**
RTCM TTL L Level	VCC=3.3V	0	_	0.8	**V**
Current Consumption @ 3.3V	Acquisition		19		**mA**
	Tracking		15		**mA**
Backup Power Consumption@ 3.0V	25℃		7		**uA**

3. Protocols

NMEA Output Sentence

Table-1 lists each of the NMEA output sentences specifically developed and defined by MTK for use within MTK products

Table-1: NMEA Output Sentence	
Option	**Description**
GGA	Time, position and fix type data.
GSA	GPS receiver operating mode, active satellites used in the position solution and DOP values.
GSV	The number of GPS satellites in view satellite ID numbers, elevation, azimuth, and SNR values.
RMC	Time, date, position, course and speed data. Recommended Minimum Navigation Information.
VTG	Course and speed information relative to the ground.

Table-2 lists NMEA output sentences in GPS system and GNSS system.

Table-2: NMEA Output Sentence for GPS and GNSS					
System	**GGA**	**GSA**	**GSV**	**RMC**	**VTG**
GPS	GPGGA	GPGSA	GPGSV	GPRMC	GPVTG
GNSS (GPS+Glonass)	GPGGA	GNGSA	GPGSV GLGSV	GPRMC[1] or GNRMC	GPVTG

Note1: When GPS module receive GPS satellite and GLONASS satellite, and it will output $GNRMC to replace $GPRMC sentence.

Example:

GPS system:

```
$GPGGA,064951.000,2307.1256,N,12016.4438,E,1,8,0.95,39.9,M,17.8,M,,*65
$GPGSA,A,3,29,21,26,15,18,09,06,10,,,,,2.32,0.95,2.11*00
$GPGSV,3,1,09,29,36,029,42,21,46,314,43,26,44,020,43,15,21,321,39*7D
$GPGSV,3,2,09,18,26,314,40,09,57,170,44,06,20,229,37,10,26,084,37*77
$GPGSV,3,3,09,07,,,26*73
$GPRMC,064951.000,A,2307.1256,N,12016.4438,E,0.03,165.48,260406,3.05,W,A*2C
$GPVTG,165.48,T,,M,0.03,N,0.06,K,A*37
```

GNSS system:

```
$GPGGA,064951.000,2307.1256,N,12016.4438,E,1,8,0.95,39.9,M,17.8,M,,*65
$GNGSA,A,3,08,28,20,04,32,17,11,,,,,,1.00,0.63,0.77*1B
$GNGSA,A,3,77,76,86,78,65,88,87,71,72,,,,1.00,0.63,0.77*17
$GPGSV,4,1,14,28,75,321,44,42,54,137,39,20,53,080,44,17,40,330,44*77
$GPGSV,4,2,14,04,33,253,43,32,28,055,41,08,26,212,40,11,14,055,33*7F
$GPGSV,4,3,14,10,12,198,,07,06,179,38,23,04,125,44,27,02,314,*7E
$GPGSV,4,4,14,193,,,42,01,,,36*45
$GLGSV,3,1,09,72,45,084,40,77,39,246,44,87,36,014,44,65,33,157,36*62
$GLGSV,3,2,09,78,26,306,41,88,23,315,42,76,15,192,38,86,13,067,38*64
$GLGSV,3,3,09,71,12,035,38*54
$GNRMC,064951.000,A,2307.1256,N,12016.4438,E,0.03,165.48,260406,3.05,W,A*2C
$GPVTG,165.48,T,,M,0.03,N,0.06,K,A*37
```

GGA—Global Positioning System Fixed Data. Time, Position and fix related data

Table-3 contains the values for the following example：

$GPGGA,064951.000,2307.1256,N,12016.4438,E,1,8,0.95,39.9,M,17.8,M,,*65

Table-3: GGA Data Format			
Name	**Example**	**Units**	**Description**
Message ID	$GPGGA		GGA protocol header
UTC Time	064951.000		hhmmss.sss
Latitude	2307.1256		ddmm.mmmm
N/S Indicator	N		N=north or S=south
Longitude	12016.4438		dddmm.mmmm
E/W Indicator	E		E=east or W=west
Position Fix Indicator	1		See **Table-3**
Satellites Used	8		Range 0 to 14
HDOP	0.95		Horizontal Dilution of Precision
MSL Altitude	39.9	meters	Antenna Altitude above/below mean-sae-level
Units	M	meters	Units of antenna altitude
Geoidal Separation	17.8	meters	
Units	M	meters	Units of geoid separation
Age of Diff. Corr.		second	Null fields when DGPS is not used
Checksum	*65		
<CR> <LF>			End of message termination

Table-4: Position Fix Indicator	
Value	**Description**
0	Fix not available
1	GPS fix
2	Differential GPS fix

GSA—GNSS DOP and Active Satellites

Table-5 contains the values for the following example：

$GPGSA,A,3,29,21,26,15,18,09,06,10,,,,,2.32,0.95,2.11*00

Table-5: GSA Data Format			
Name	**Example**	**Units**	**Description**
Message ID	$GPGSA		GSA protocol header
Mode 1	A		See **Table-5**
Mode 2	3		See **Table-6**
Satellite Used	29		SV on Channel 1
Satellite Used	21		SV on Channel 2
....	….	….	....
Satellite Used			SV on Channel 12
PDOP	2.32		Position Dilution of Precision
HDOP	0.95		Horizontal Dilution of Precision
VDOP	2.11		Vertical Dilution of Precision
Checksum	*00		
<CR> <LF>			End of message termination

Table-6: Mode 1	
Value	**Description**
M	Manual—forced to operate in 2D or 3D mode
A	2D Automatic—allowed to automatically switch 2D/3D

Table-7: Mode 2	
Value	**Description**
1	Fix not available
2	2D (＜4 SVs used)
3	3D (≧4 SVs used)

GSA—GNSS DOP and Active Satellites

Table-8 contains the values for the following example：

$GNGSA,A,3,08,28,20,04,32,17,11,,,,,,1.00,0.63,0.77*1B (GPS Information)

$GNGSA,A,3,77,76,86,78,65,88,87,71,72,,,,1.00,0.63,0.77*17 (Glonass Information)

Table-8: GSA Data Format

Name	Example	Units	Description
Message ID	$GNGSA		GSA protocol header
Mode 1	A		See **Table-6**
Mode 2	3		See **Table-7**
Satellite Used [1]	29		SV on Channel 1
Satellite Used [1]	21		SV on Channel 2
....	....	....	....
Satellite Used [1]			SV on Channel 12
PDOP	2.32		Position Dilution of Precision
HDOP	0.95		Horizontal Dilution of Precision
VDOP	2.11		Vertical Dilution of Precision
Checksum	*00		
<CR> <LF>			End of message termination

Note1: GPS SV No. #1~#32
Glonass SV No. #65~#96

Table-9: Mode 1

Value	Description
M	Manual—forced to operate in 2D or 3D mode
A	2D Automatic—allowed to automatically switch 2D/3D

Table-10: Mode 2

Value	Description
1	Fix not available
2	2D (＜4 SVs used)
3	3D (≧4 SVs used)

GSV— Satellites in View, includes GPS(GPGSV) and GLONASS(GLGSV)

Table-11 contains the values for the following example：

$GPGSV,4,1,14,28,75,321,44,42,54,137,39,20,53,080,44,17,40,330,44*77

$GPGSV,4,2,14,04,33,253,43,32,28,055,41,08,26,212,40,11,14,055,33*7F

$GPGSV,4,3,14,10,12,198,,07,06,179,38,23,04,125,44,27,02,314,*7E

$GPGSV,4,4,14,193,,,42,01,,,36*45

Table-11: GPGSV Data Format

Name	Example	Units	Description
Message ID	$GPGSV		GSV protocol header
Number of Messages	4		Range 1 to 4 *(Depending on the number of satellites tracked, multiple messages of GSV data may be required.)*
Message Number1	1		Range 1 to 4
Satellites in View	14		
Satellite ID	28		Channel 1 (Range 1 to 32)
Elevation	75	degrees	Channel 1 (Maximum 90)
Azimuth	321	degrees	Channel 1 (True, Range 0 to 359)
SNR (C/No)	44	dBHz	Range 0 to 99, (null when not tracking)
....	….	….	....
Satellite ID	17		Channel 4 (Range 1 to 32)
Elevation	40	degrees	Channel 4 (Maximum 90)
Azimuth	330	degrees	Channel 4 (True, Range 0 to 359)
SNR (C/No)	44	dBHz	Range 0 to 99, (null when not tracking)
Checksum	*7D		
<CR> <LF>			End of message termination

GSV— Satellites in View, includes GPS(GPGSV) and GLONASS(GLGSV)

Table-12 contains the values for the following example：

$GLGSV,3,1,09,72,45,084,40,77,39,246,44,87,36,014,44,65,33,157,36*62

$GLGSV,3,2,09,78,26,306,41,88,23,315,42,76,15,192,38,86,13,067,38*64

$GLGSV,3,3,09,71,12,035,38*54

Table-12: GLGSV Data Format

Name	Example	Units	Description
Message ID	$GLGSV		GSV protocol header
Number of Messages	4		Range 1 to 4 *(Depending on the number of satellites tracked, multiple messages of GSV data may be required.)*
Message Number1	1		Range 1 to 4
Satellites in View	09		
Satellite ID	78		Channel 1 (Range 1 to 32)
Elevation	26	degrees	Channel 1 (Maximum 90)
Azimuth	306	degrees	Channel 1 (True, Range 0 to 359)
SNR (C/No)	41	dBHz	Range 0 to 99, (null when not tracking)
....	….	….	....
Satellite ID	88		Channel 4 (Range 1 to 32)
Elevation	23	degrees	Channel 4 (Maximum 90)
Azimuth	315	degrees	Channel 4 (True, Range 0 to 359)
SNR (C/No)	42	dBHz	Range 0 to 99, (null when not tracking)
Checksum	*7D		
<CR> <LF>			End of message termination

RMC—Recommended Minimum Navigation Information

Table-13 contains the values for the following example：

$GPRMC,064951.000,A,2307.1256,N,12016.4438,E,0.03,165.48,260406,,,A*55

Table-13: RMC Data Format			
Name	**Example**	**Units**	**Description**
Message ID	$GPRMC		RMC protocol header
UTC Time	064951.000		hhmmss.sss
Status	A		A=data valid or V=data not valid
Latitude	2307.1256		ddmm.mmmm
N/S Indicator	N		N=north or S=south
Longitude	12016.4438		dddmm.mmmm
E/W Indicator	E		E=east or W=west
Speed over Ground	0.03	knots	
Course over Ground	165.48	degrees	True
Date	260406		ddmmyy
Magnetic Variation		degrees	E=east or W=west **(Need Ascenkorea Customization Service)**
Mode	A		A= Autonomous mode D= Differential mode E= Estimated mode
Checksum	*65		
<CR> <LF>			End of message termination

RMC—Recommended Minimum Navigation Information

Table-14 contains the values for the following example：

$GNRMC,064951.000,A,2307.1256,N,12016.4438,E,0.03,165.48,260406,3.05,W,A*2C

Table-14: RMC Data Format			
Name	**Example**	**Units**	**Description**
Message ID	$GNRMC		RMC protocol header
UTC Time	064951.000		hhmmss.sss
Status	A		A=data valid or V=data not valid
Latitude	2307.1256		ddmm.mmmm
N/S Indicator	N		N=north or S=south
Longitude	12016.4438		dddmm.mmmm
E/W Indicator	E		E=east or W=west
Speed over Ground	0.03	knots	
Course over Ground	165.48	degrees	True
Date	260406		ddmmyy
Magnetic Variation	3.05, W	degrees	E=east or W=west (Need AscenKorea Customization Service)
Mode	A		A= Autonomous mode D= Differential mode E= Estimated mode
Checksum	*2C		
<CR> <LF>			End of message termination

VTG—Course and speed information relative to the ground

Table-15 contains the values for the following example**:**

$GPVTG,165.48,T,,M,0.03,N,0.06,K,A*37

Table-15: VTG Data Format			
Name	**Example**	**Units**	**Description**
Message ID	$GPVTG		VTG protocol header
Course	165.48	degrees	Measured heading
Reference	T		True
Course		degrees	Measured heading
Reference	M		**Magnetic (Need Ascenkorea Customization Service)**
Speed	0.03	knots	Measured horizontal speed
Units	N		Knots
Speed	0.06	km/hr	Measured horizontal speed
Units	K		Kilometers per hour
Mode	A		A= Autonomous mode D= Differential mode E= Estimated mode
Checksum	*06		
<CR> <LF>			End of message termination

MTK NMEA Command Protocol

Packet Type:

103 PMTK_CMD_COLD_START

Packet Meaning:

Cold Start：Don’t use Time, Position, Almanacs and Ephemeris data at re-start.

Example:

$PMTK103*30<CR><LF>

4. Application

4.1 Description

This chapter introduces the reference schematic design for the best performance.

4.2 Reference Design Circuit

External Antenna Application

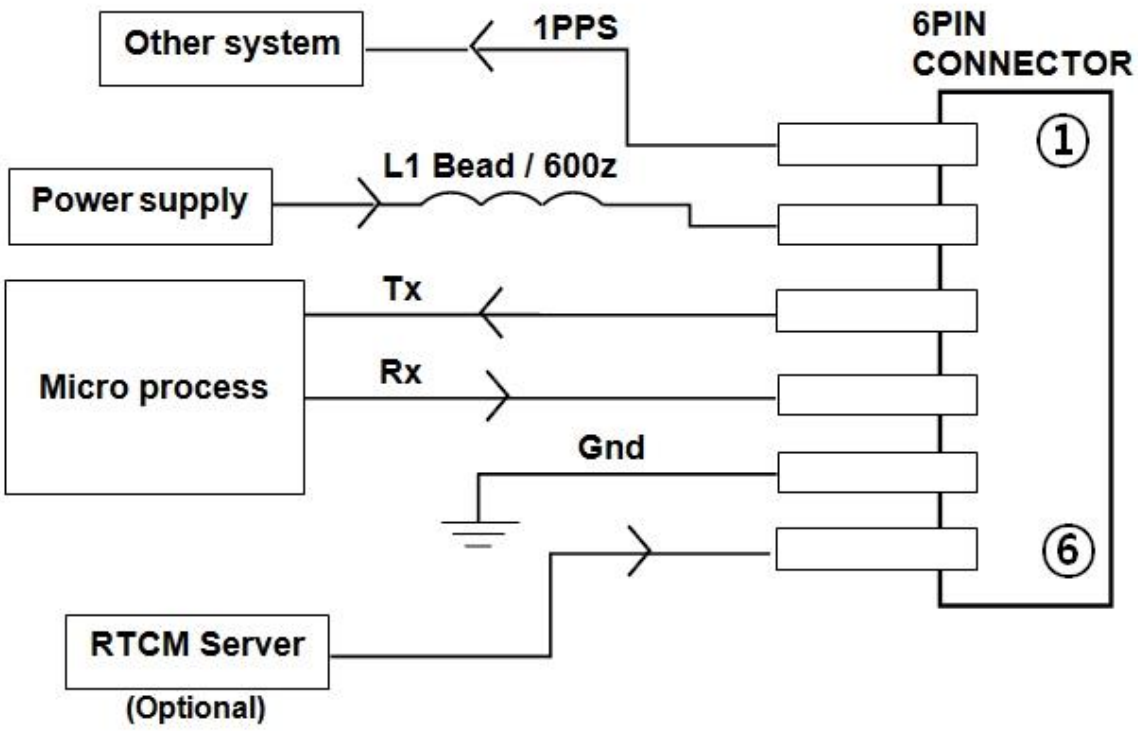

Notice:

Ferrite bead L1 was add for power noise reduction.

5. Packing and Handling

GPS modules, like any other SMD devices, are sensitive to moisture, electrostatic discharge, and temperature. By following the standards outlined in this document for Ascenkorea GPS module storage and handling, it is possible to reduce the chances of them being damaged during production set-up. This document will go through the basics on how Ascenkorea packages its modules to ensure they arrive at their destination without any damages and deterioration to performance quality, as well as some cautionary notes before going through the surface mount process.

Please read the sections II to V carefully to avoid damages permanent damages due to moisture intake

GPS receiver modules contain highly sensitive electronic circuits and are electronic sensitive devices and improper handling without ESD protections may lead to permanent damages to the modules. Please read section VI for more details.

5.1 ESD Handling

Please carefully follow the following precautions to prevent severe damage to GPS modules.

Ascenkorea GPS modules are sensitive to electrostatic discharges, and thus are Electrostatic Sensitive Devices (ESD). Careful handling of the GPS modules and in particular to its patch antenna (if included) and RF_IN pin, must follow the standard ESD safety practices:

- ✓ Unless there is a galvanic coupling between the local GND and the PCB GND, then the first point of contact when handling the PCB shall always be between the local GND and PCB GND.
- ✓ Before working with RF_IN pin, please make sure the GND is connected
- ✓ When working with RF_IN pin, do not contact any charges capacitors or materials that can easily develop or store charges such as patch antenna, coax cable, soldering iron.
- ✓ Please do not touch the mounted patch antenna to prevent electrostatic discharge from the RF input
- ✓ When soldering RF_IN pin, please make sure to use an ESD safe soldering iron (tip).